HIP TRIM REC
RECESSED PROFILE

DARKON™
THE EDGE OF LIGHT

INSTALLATION
Ensure that products are mounted with supplied, recommended or appropriate screws and fixings to suit the mounting surface.

WARNING
Installation is only to be carried out by suitably qualified persons in accordance with installation instructions and all applicable regulations or standards. (Improper installation can create an electrical hazard with risk of electric shock, fire or injury). Darkon will not be held responsible for any consequences arising from improper product handling, storage or installation.

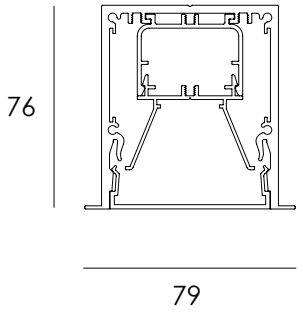

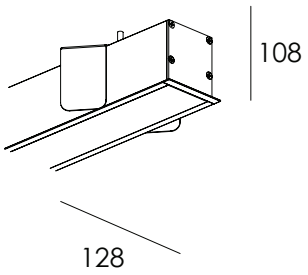

TOOLS REQUIRED
Power drill / Pencil / Philips driver or Phillips Screw driver / Wallboard Saw / Lens Removal Tool.

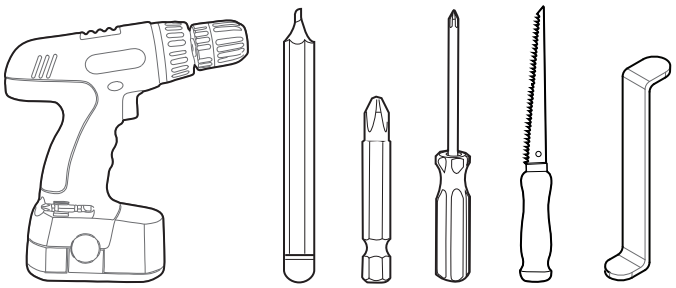

COMPONENTS:

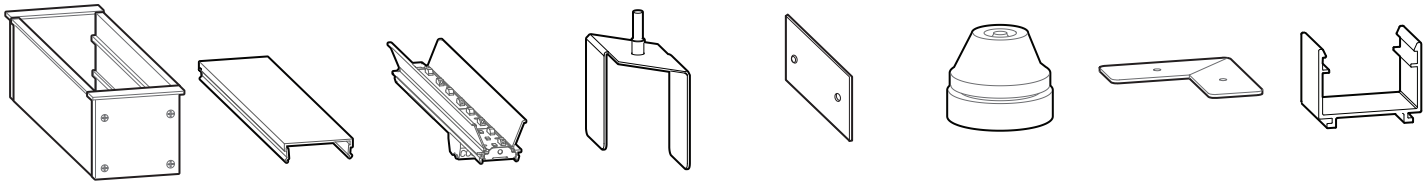

A B C D E F G H

MINIMUM AREA REQUIREMENTS
FIGURE 1.
FOR OPTIMAL LONGEVITY, ENSURE UNRESTRICTED AIRFLOW OVER LUMINAIRE HEATSINK
DO NOT COVER W/ INSULATION

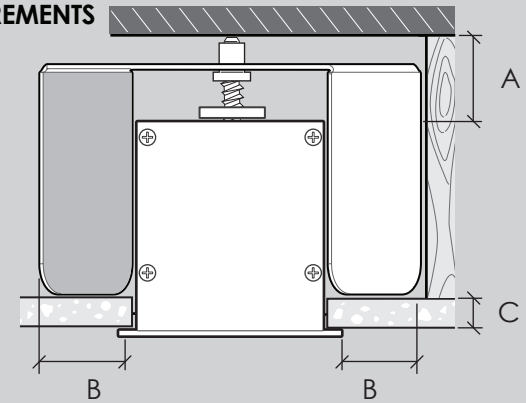

	DISTANCE	DESCRIPTION
A)	40MM	CLEARENCE FOR TOP OF LUMINIARE
B)	40MM	CLEARENCE B/W STRUCTURAL MEMBER
C)	20MM	MAXIMUM WALL BOARD THICKNESS

CUT OUT
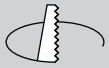

LENGTH LESS
10mm x 70mm W

IP22

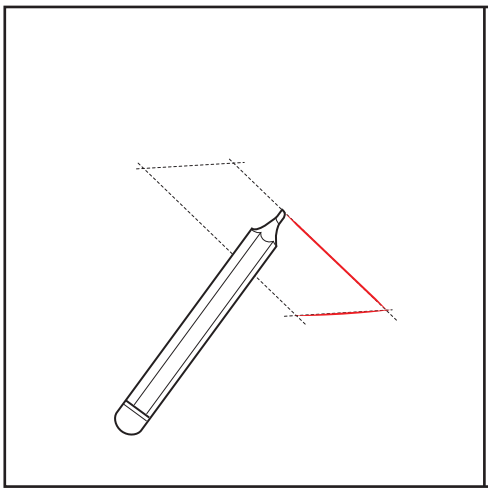

1.
-Measure and mark the appropriate cut.

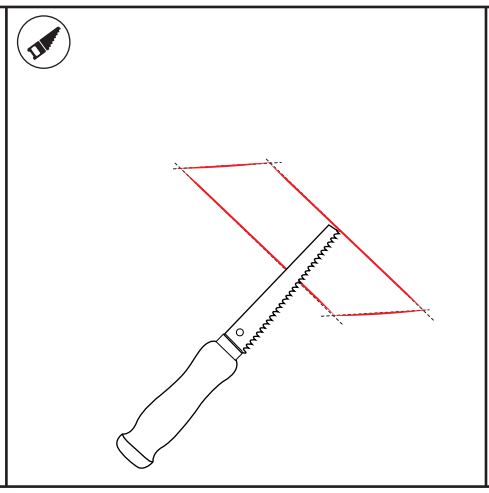

2.
-Make the cut-out using an *appropriate tool.*

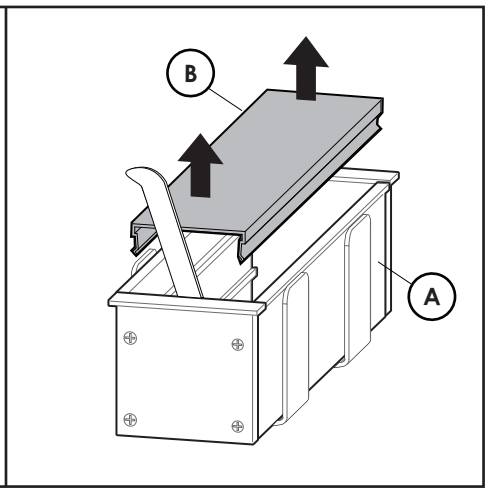

3.
-Use lens removal tool to lever Lens(B) out of clipping detail.

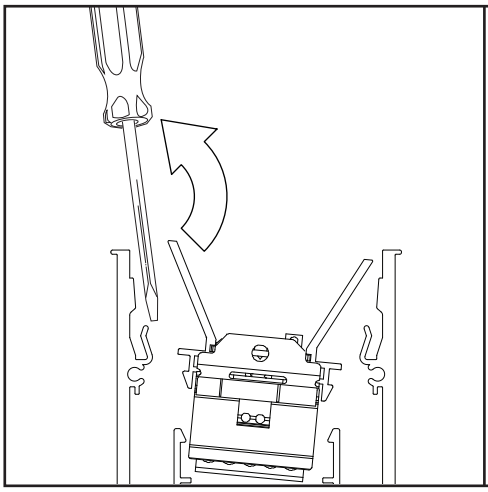

4.
-Remove the Light tray(C) using a Flat head screw driver to lever the tray out from the clips.

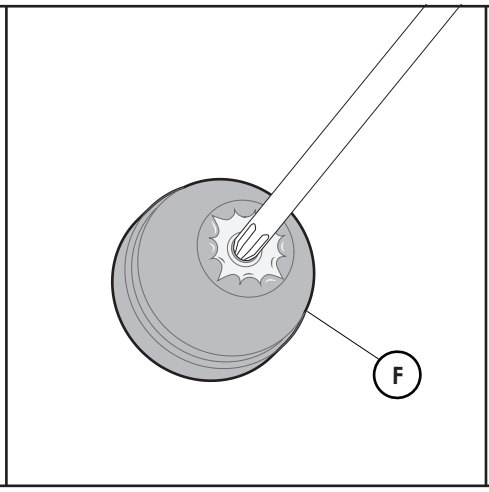

5.
-Pierce the IP Grommet(F) with the tip of a screw driver.

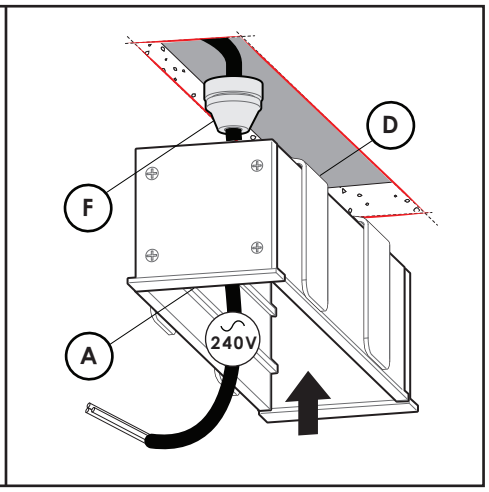

6.
-Feed the Power Cable through the pierced IP Grommet & insert into hole ontop of recessbody.
-Insert the recessbody into the cut out.

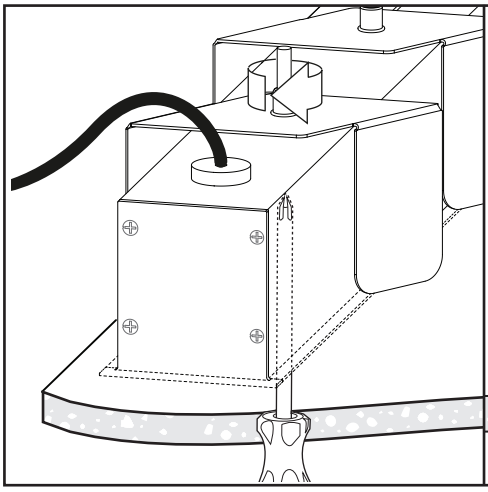

7.
-With a Screwdriver; screw the bolt in order to re-orinetate the Spring Clip*(D)* to suspend the light fixture.

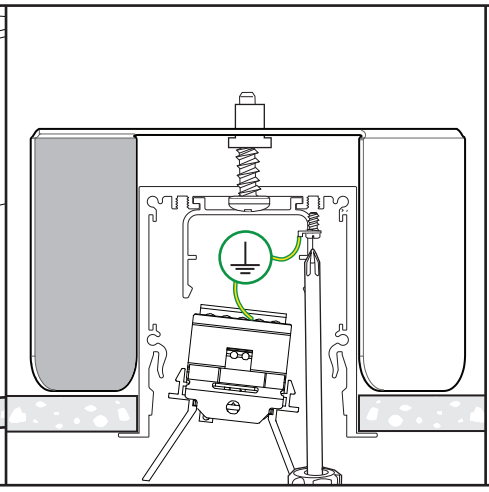

8.
-Bolt Earth lug to recessbody(A).

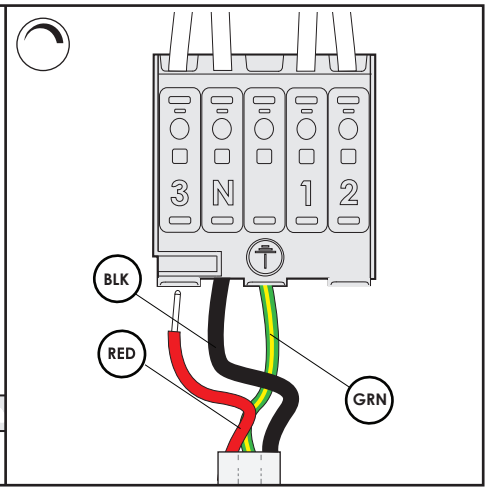

9A. IF NON DIM
-Wire primary wires into teriminal.

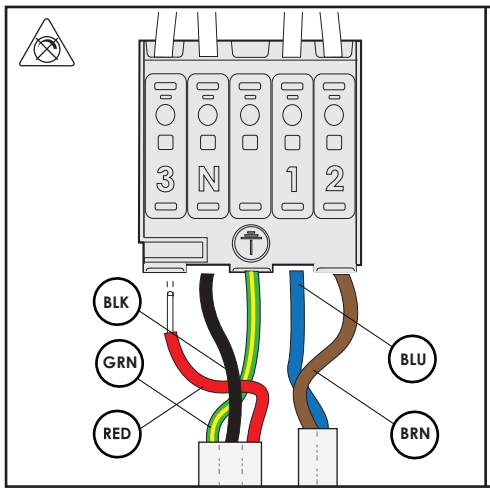

9B. IF DIM
-Wire primary wires into teriminal.
-Wire Dimming wires into terminal.

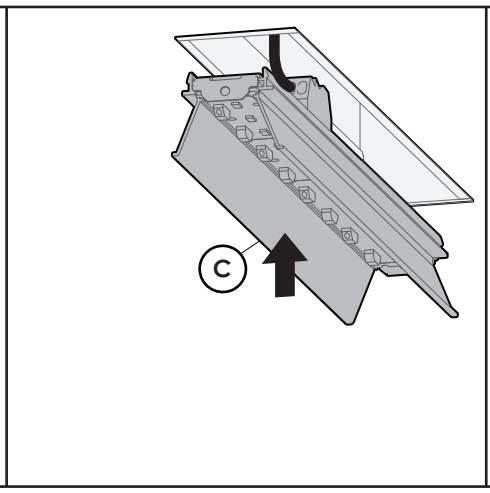

10.
-Install Light Tray into clips(H). Centre light tray

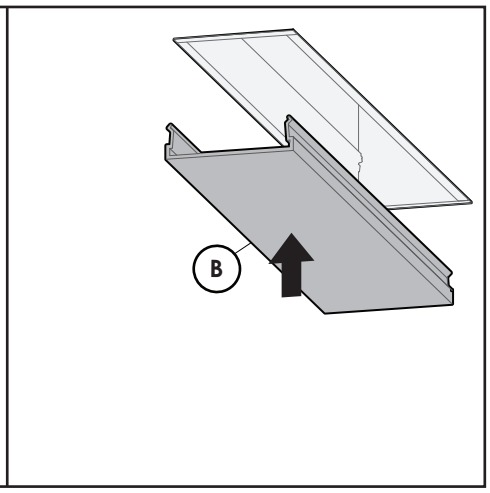

11.
-Install Lens*(B)* by inserting into clipping detail.

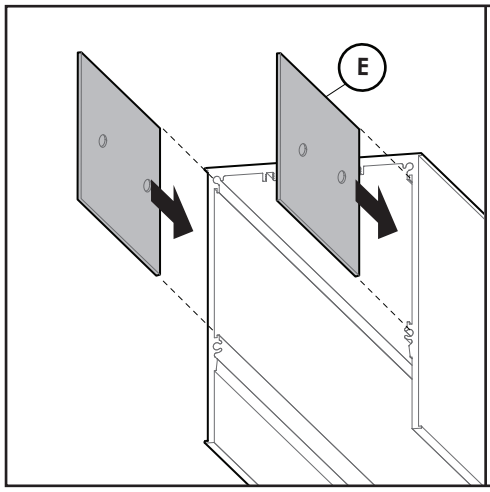

12. IF MULTIPLE BODIES
-Replicate stage 1-11 by installing first recessed body.
-Slide linear connectors into the sliding detail of the second recessbody(A).

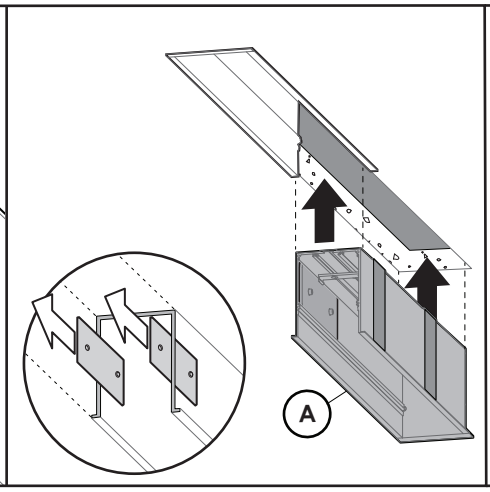

13.
-Insert second recess body. Slide linear connectors into the sliding detail of the recessbody(A). Ensure connector is overlapping join.

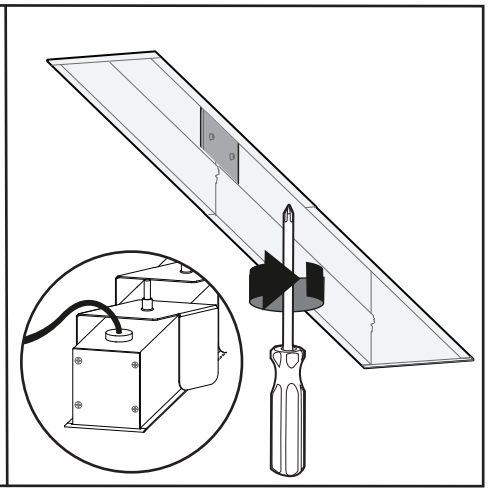

14.
-With a Screwdriver; screw the bolt in order to re-orinetate the Spring Clip*(D)* to suspend the mitre body

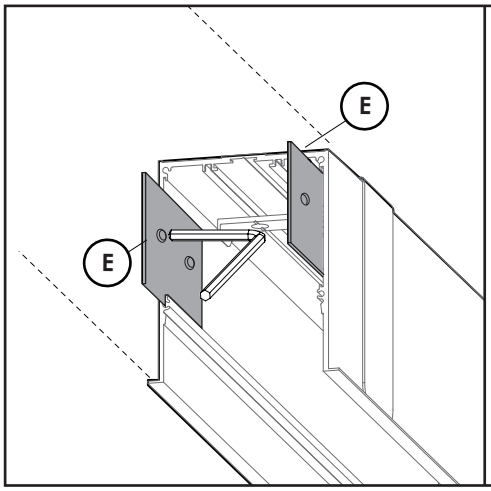

15.
-Tighten all grub screws to lock linear connectors(E) in place with 3mm allen key.

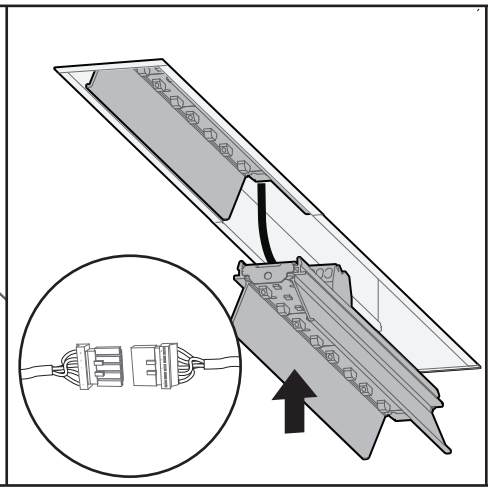

16.
-Connect the appropriate plugs.
-Install Light Tray(B) by inserting into light tray clips(H). Centre light trays to ensure homoginous illumination.

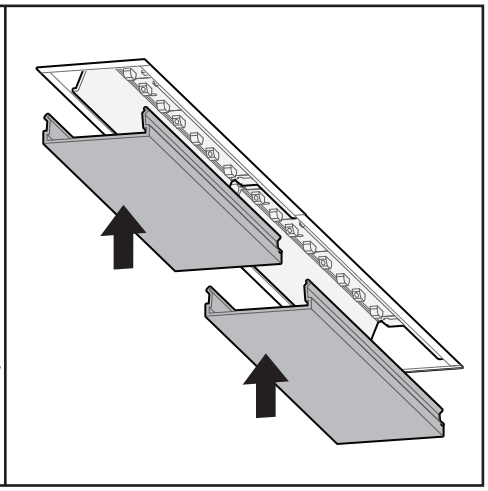

17.
-Install Lens *(B)* by inserting into recessbody(A) clipping detail.

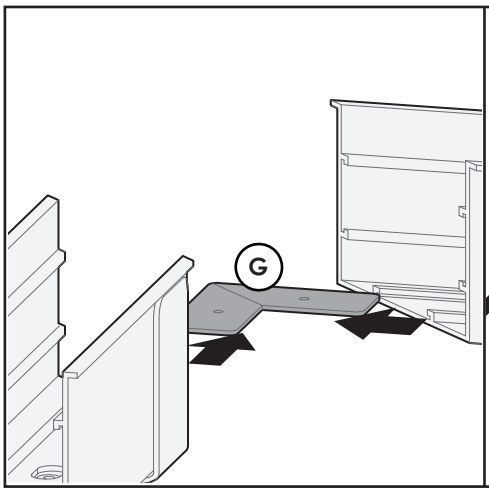

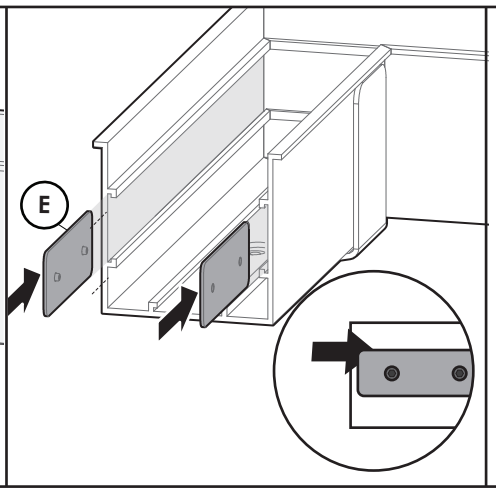

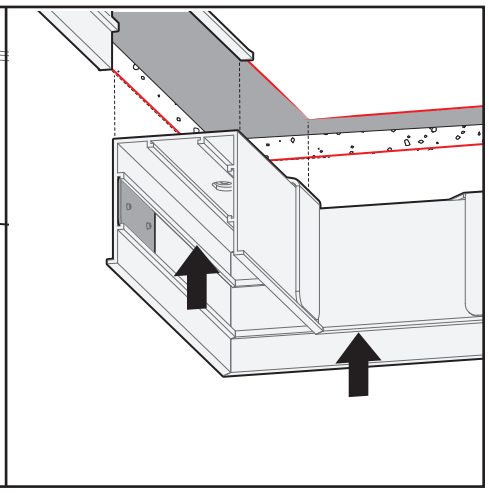

18. IF MITRED CORNER
-Replicate stage 1-11 by installing first recessed body. Slide mitre bracket(G) into sliding detail of mitred bodies(A)

19.
-Slide linear connectors into the sliding detail of the recessbody(A).

20.
-Insert mitered mainbody into the cut out.

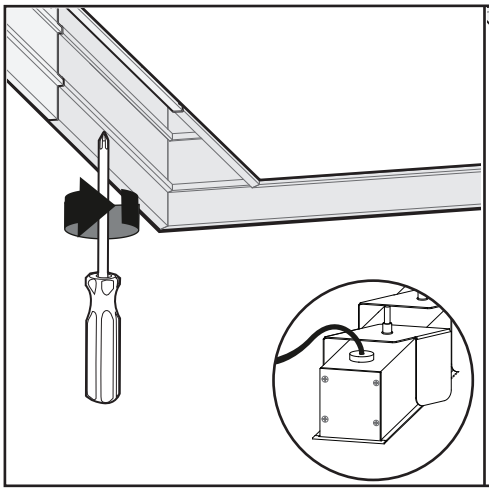

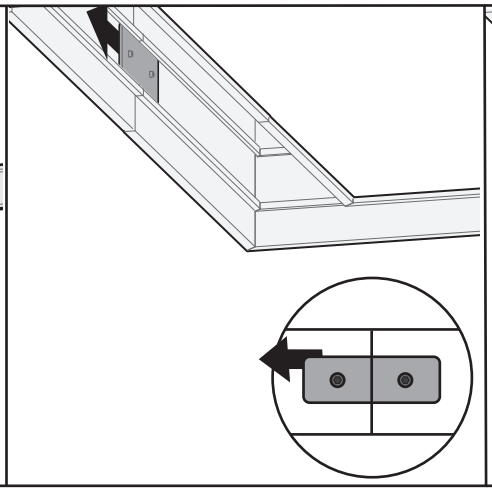

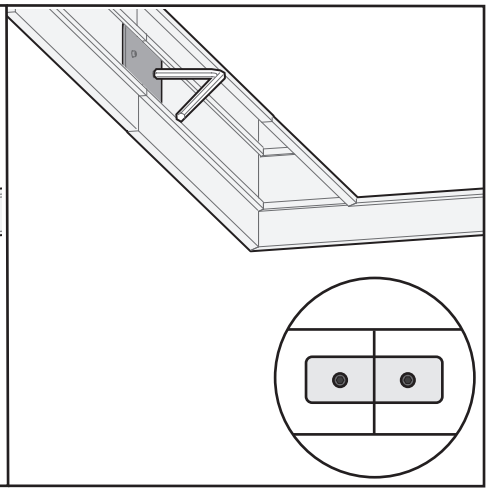

21.
-With a Screwdriver; screw the bolt in order to re-orinetate the Spring Clip*(D)* to suspend the mitre body

22.
-Slide linear connectors into the sliding detail of the recessbody(A). Ensure connector is overlapping join.

23.
-Tighten all grub screws to lock linear connectors(E) in place with 3mm allen key.

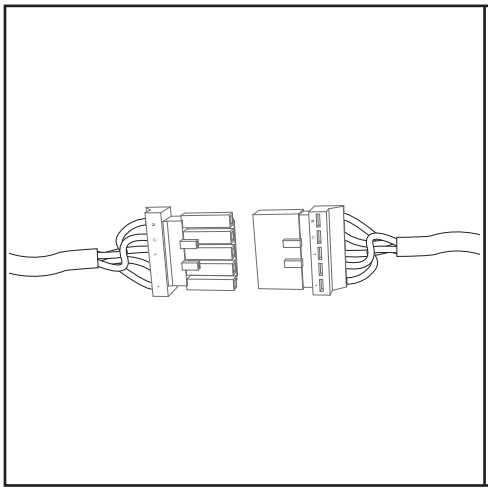

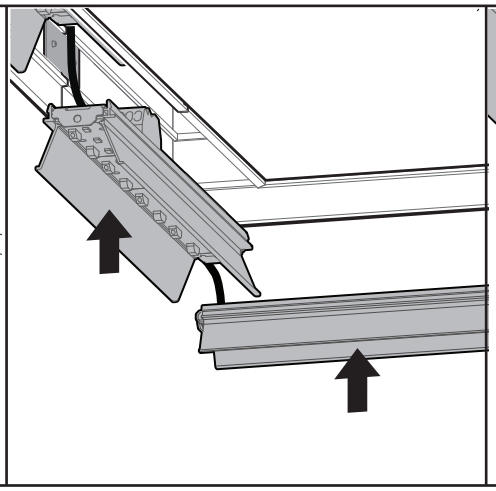

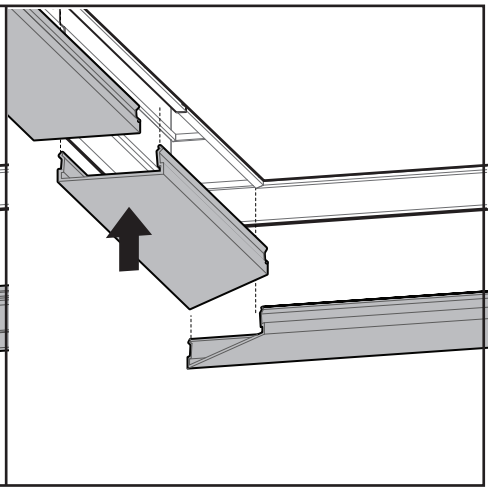

24.
-Connect the appropriate plugs.

25.
-Install Light Tray(B) by inserting into light tray clips(H). Centre light trays to ensure homoginous illumination.

26.
-Install Lens *(B)* by inserting into recessbody(A) clipping detail.